BRACKET | BRKT-016

BRKT-016

UNIVERSAL CAST SWIVEL BRACKET

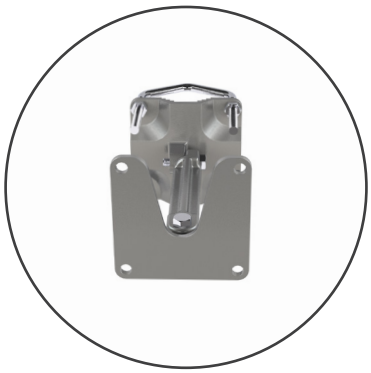

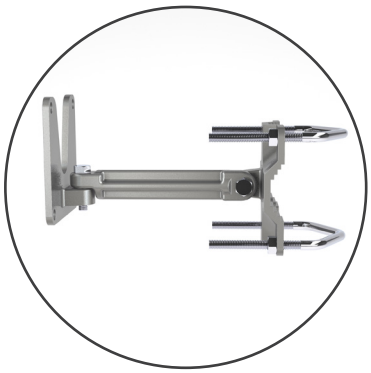

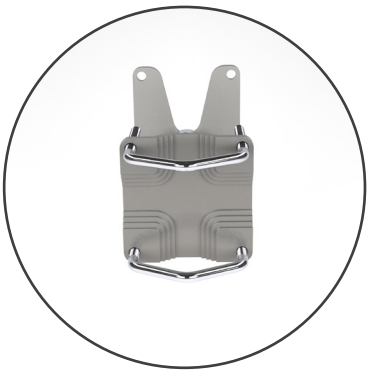

Ordering Information

Commercial name:	BRKT-016
Order Product Code:	A-BRKT-016
EAN Number:	0707273469106

Product Drawing

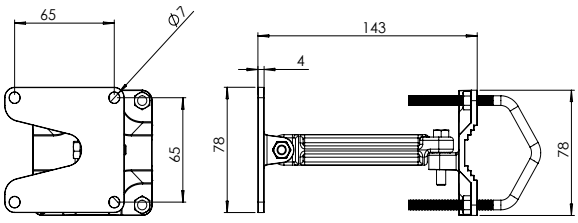

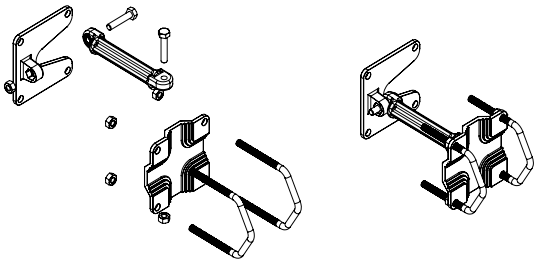

Mechanical Specifications

U-shape base dimensions (L x W):	78 x 77.5mm
Square base dimensions (L x W):	77.6 x 77.3mm
Connector rod dimensions (L x W):	120 x 16mm
Packaged Dimensions (L x W x D):	100 x 120 x 120mm
Total Weight:	311g
Packaged Weight:	318g
Material:	Cast Aluminium ADC12
Process:	Cast Item
Surface finish:	Die Cast 1.6 - 0.8 µm

Product Box Contents

Product:	A-BRKT-016
M6x60mm U-bolt ss	2
M6 Nuts (SS):	4
M6 nylock nut ss:	2
M6 flat washer ss:	6
M6x25mm hex bolt ss:	2

Certification Approvals and Standards

Flammability rating:	UL:1581
Salt spray:	MIL-STD810F/ASTM B117
Product Safety:	Complies with UL, CE, EN, CSA and IEC standards

Contact Poynting

Poynting Antennas (Pty) Ltd - Head Office
Unit 4, N1 Industrial Park
Landmarks Avenue,
Samrand, 0157
South Africa

Phone: +27 (0) 12 657 0050
E-mail: sales@poynting.co.za

Poynting Europe
Regus Business Center Neue Messe Riem
Kronstadter Straße 4
81677 München
Germany

Phone: +49 89 208026538
E-mail: sales-europe@poynting.tech

©2015 Poynting Antennas (Pty) Ltd. All rights reserved.
Product Specifications may change without prior notice

Revised: October 2016

Regulatory Compliance: RoHS 2011/65/EU Compliant | ISO 9001:2008
Document version: TS-A-BRKT-016_V1
www.poynting.tech